Recommended Cutting Conditions

(inch)

	Workpiece Material	Properties	Grade	Breaker	Cutting Speed **vc** (SFM)	Cutting Width **ae**	Depth of Cut **ap**	Feed per Tooth (IPT)
N	Aluminum Alloys	Content Si<5%	TF15 MP9120	**GM**	13120(6560–16500)	≤.5 DC	≤ .197	≤ .014
							≤ .394	≤ .012
							≤ .571	≤ .010
						≤.75 DC	≤ .197	≤ .012
							≤ .394	≤ .010
							≤ .571	≤ .008
						DC (Slot)	≤ .197	≤ .012
			TF15 LC15TF	**GL**	13120(6560–16500)	≤.75 DC	≤ .197	≤ .008
							≤ .394	≤ .006
							≤ .571	≤ .004
						DC (Slot)	≤ .197	≤ .008

Note 1) The above cutting conditions are determined based on high workpiece materials and machine rigidity, where no vibration occurred. If vibrations occur make adjustments according to the machining conditions.

Note 2) Note, vibrations may occur in the following conditions.
- When using long tool overhang.
- When pocket machining corner radii.
- When the workpiece materials has poor clamping rigidity or when the machine rigidity or workpiece materials rigidity is low, vibrations can occur easily, if so, reduce cutting conditions such as width and depth of cut and feed per tooth.

■ Ramping / Helical Milling / Drilling

● **Ramping**

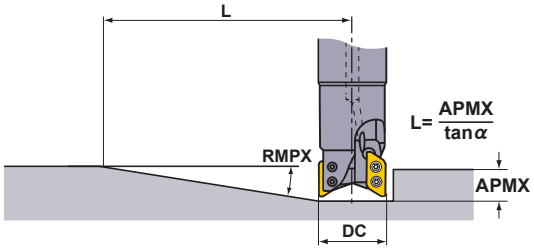

● **Helical Milling**

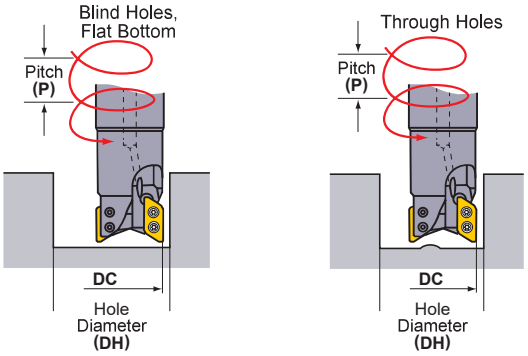

Refer to the table below for cutting conditions. For feed per tooth and cutting speed, follow the cutting conditions for slot milling.

(inch)

DC inch	DC mm	Type	Insert Corner R **RE**	Ramping: Max. Ramping Angle **RMPX**	Ramping: Min. Distance *1 **L**	Helical Milling (Blind Hole, Flat Bottom): Max. Hole Diameter **DH max.**	Helical Milling (Blind Hole, Flat Bottom): Max. Pitch **P max.**	Helical Milling (Blind Hole, Flat Bottom): Min. Hole Diameter **DH min.**	Helical Milling (Blind Hole, Flat Bottom): Max. Pitch **P max.**	Helical Milling (Through Hole): Min. Hole Diameter **DH min.**	Helical Milling (Through Hole): Max. Pitch **P max.**	Drilling
1.969	50.0	D	.016–.047	8.2°	4.252	3.811 *2	.551	3.756	.551	3.197	.551	.217
			.063–.094	7.6°	4.606	3.717 *3	.512	3.685	.512	3.197	.512	.197
			.118–.126	6.9°	5.079	3.654 *4	.472	3.622	.472	3.197	.472	.177
		E	.157	6.3°	5.314	3.591	.394	3.543	.394	3.197	.394	.154
			.197	5.8°	5.748	3.512	.354	3.496	.354	3.197	.354	.142
2.000	50.8	D	.016–.047	8.7°	4.016	3.874 *2	.551	3.819	.551	3.260	.551	.217
			.063–.094	8.2°	4.252	3.780 *3	.512	3.748	.512	3.260	.512	.197
			.118–.126	7.6°	4.606	3.717 *4	.472	3.685	.472	3.260	.472	.177
		E	.157	6.9°	4.843	3.654	.394	3.606	.394	3.260	.394	.154
			.197	6.5°	5.118	3.575	.354	3.559	.354	3.260	.354	.142

*1 Using the maximum ramping angle, the distance to reach the maximum depth of cut is as follows: L= (maximum depth of cut APMX/tan α). Maximum depth of cut D type is .610", E type is .583".

*2 Corner radius of .047". For other corner radii, use the following formula. {(cutting edge diameter DC)–(corner radius RE)–.022"}×2

*3 Corner radius of .094". For other corner radii, use the following formula. {(cutting edge diameter DC)–(corner radius RE)–.022"}×2

*4 Corner radius of .126". For other corner radii, use the following formula. {(cutting edge diameter DC)–(corner radius RE)–.022"}×2

Note 1) The recommended ramping feed is .002 IPT or under.